EANCOM® 2002 S4

TAXCON

Tax control message

Edition 2016

1. Introduction 2
2. Message Structure Chart 3
3. Branching Diagram 4
4. Segments Description 7
5. Segments Layout 9
6. Example(s) 29

1. Introduction

Status

MESSAGE TYPE : TAXCON

REFERENCE DIRECTORY : D.01B

EANCOM® SUBSET VERSION : 004

Definition

A Tax Control message is used to enable the transmission of information relating to the tax details for an invoice, or a batch / batches of invoice messages (Invoices, Credit Notes, Debit Notes).

This enables the recipient to ensure the completeness of messages, the prevention of duplication, and the generation of control values and reports.

Principles

The tax control message meets the control needs of individual users, or requirements imposed by administrations, in the transmission of multiple messages or groups of messages between commercial users and to an administration.

The tax control message may be sent by a seller to a buyer detailing a batch of invoices, and/or on a period basis a summary of the tax content of that period's invoices.

Additionally the tax control message may be sent from a trading party to a third party, e.g. tax authority, auditor, for information or accounting purposes.

General Notes

Batch Of Invoices

A tax control message detailing a batch of invoices may contain multiple invoice message files which in turn may contain any number of invoices from 1 upwards.

A tax control batch is generated by the sender at the time the batch of invoices is constructed by the in-house application software. The receiver in turn must process the batch at the time the message is entered into the in-house application system.

The tax control details a vat summary for the batch of invoices transmitted between trading partners.

The tax details extracted by the receivers in-house application software should exactly match the details transmitted by the sender. This is of most importance where the tax control message is being used for auditing purposes, either internal or external.

Period Summary

A tax control message detailing a period summary may be generated by either the original sender or receiver using data created from individual batches of invoices during the period and may refer to other tax contrl messages.

A period summary may cover any time span, e.g., month, quarter and is defined jointly by the parties exchanging the data, or by the party requesting the information from trading parties, e.g. tax authorities.

Use of a period summary is identified through the use of data element 2005 in the DTM segment (segment number 3) immediately after the BGM segment.

The period summaries should exactly match for both trading parties. This is of most importance where the tax control message is being used for auditing purposes, either internal or external.

2. Message Structure Chart

Tax Control Heading Section

UNH	1	M	1	- Message header
BGM	2	M	1	- Beginning of message
DTM	3	M	5	- Date/time/period
SG1		C	5	- RFF-DTM
RFF	4	M	1	- Reference
DTM	5	C	5	- Date/time/period
SG2		M	5	- NAD-RFF
NAD	6	M	1	- Name and address
RFF	7	C	1	- Reference
UNS	8	M	1	- Section control

Tax Control Detail Section

SG3		M	9999	- RFF-DTM-SG4
RFF	9	M	1	- Reference
DTM	10	C	5	- Date/time/period
SG4		M	9	- DOC-MOA-CNT-SG5
DOC	11	M	1	- Document/message details
MOA	12	C	9	- Monetary amount
CNT	13	M	1	- Control total
SG5		M	9	- TAX-MOA
TAX	14	M	1	- Duty/tax/fee details
MOA	15	M	3	- Monetary amount

Tax Control Summary Section

UNT	16	M	1	- Message trailer

3. Branching Diagram

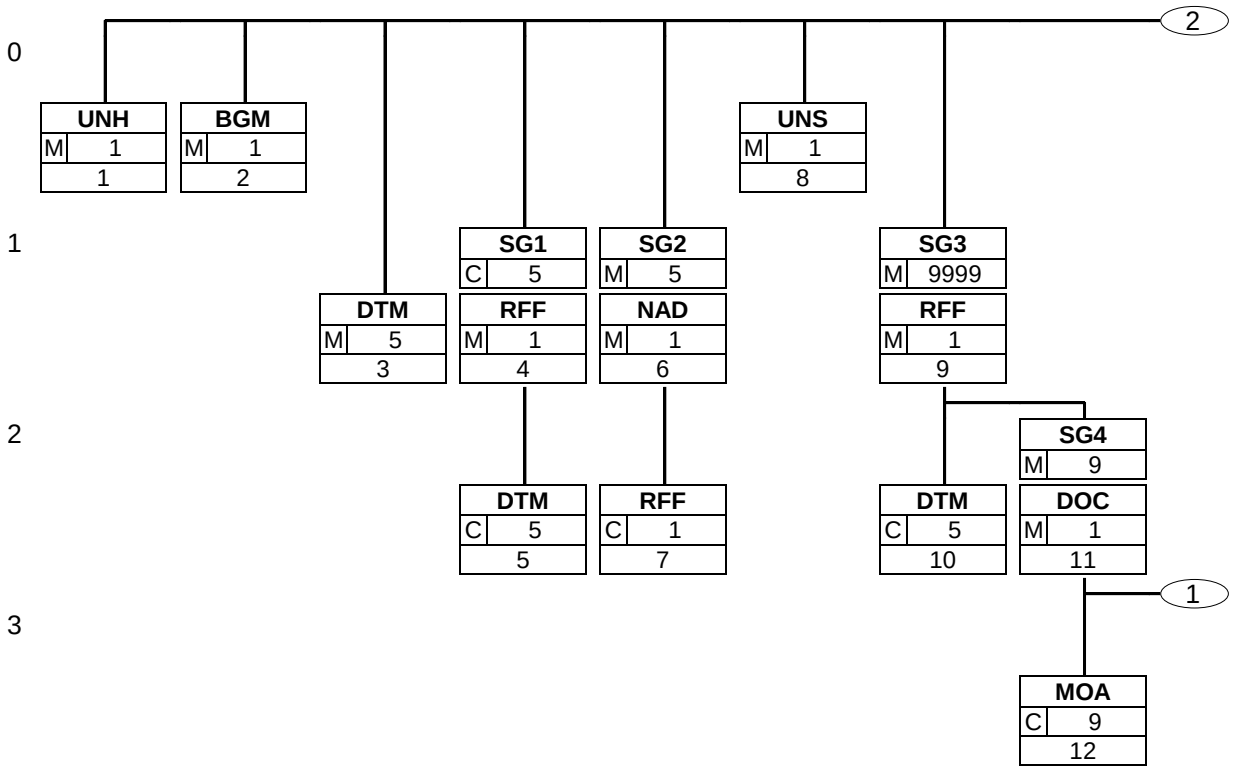

3. Branching Diagram

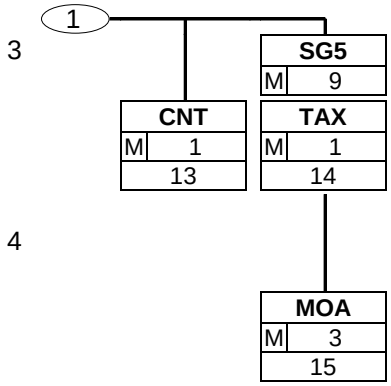

3. Branching Diagram

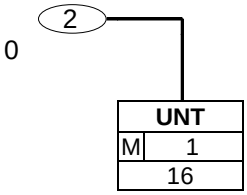

4. Segments Description

Tax Control Heading Section

UNH - M 1 - Message header

This segment is used to head, identify and specify a message.

BGM - M 1 - Beginning of message

This segment is used to indicate the type and function of a message and to transmit the identifying number.

DTM - M 5 - Date/time/period

This segment is used to specify the date or period of the Tax Control message.

SG1 - C 5 - **RFF-DTM**

A group of segments for giving references and where necessary, their dates, relating to the whole message.

RFF - M 1 - Reference

This segment is used to specify references which apply to the whole message, e.g. the last TAXCON message exchanged.

DTM - C 5 - Date/time/period

This segment is used to specify dates relating to the references given in the previous RFF segment.

SG2 - M 5 - **NAD-RFF**

A group of segments identifying the parties involved in the transaction and, optionally tax reference numbers for the parties.

NAD - M 1 - Name and address

This segment is used to identify the trading partners exchanging the tax control message. The identification of the buyer and supplier is mandatory in all tax control messages. When the tax control message is used to summarise a period for a third party, e.g. auditor, tax authorities, the party for whom the information is required must also be specified.

RFF - C 1 - Reference

This segment is used to specify references related to the parties identified in the previous NAD segment.

UNS - M 1 - Section control

This segment is used to identify the end of the heading section of the message and the start of the detail section of the message.

Tax Control Detail Section

SG3 - M 9999 - **RFF-DTM-SG4**

A group of segments which carries all the control values. It is triggered by the reference segment and will identify the version of the file which was identified previously in the BGM segment of the Invoice.

RFF - M 1 - Reference

This segment is used to identify the invoice file (or files) to which the tax control relates.

DTM - C 5 - Date/time/period

This segment is used to specify dates and times related to the previous RFF segment.

SG4 - M 9 - **DOC-MOA-CNT-SG5**

A group of segments used to identify the type of document being summarized in the TAXCON, the monetary amounts for each document type, the control values, and the breakdown of tax values.

4. Segments Description

DOC - M 1 - Document/message details

This segment is used to identify the type of document being referenced, invoice, credit note, etc. This enables the tax types and values within the individual documents to be summarised.

MOA - C 9 - Monetary amount

This segment is used to specify the total amounts due on the document type identified in the previous DOC segment.

CNT - M 1 - Control total

This segment is used to specify the total number of messages/documents being summarised for the document type identified in the DOC segment.

SG5 - M 9 - **TAX-MOA**

A group of segments used to identify the type of tax and the values due at each rate of tax for the document being summarized.

TAX - M 1 - Duty/tax/fee details

This segment is used to identify the different tax rates included for the document type identified in the DOC segment.

MOA - M 3 - Monetary amount

This segment is used to specify the tax amounts for the tax rate specified in the previous TAX segment.

Tax Control Summary Section

UNT - M 1 - Message trailer

This segment is a mandatory UN/EDIFACT segment. It must always be the last segment in the message.

5. Segments Layout

This section describes each segment used in the EANCOM® Tax control message. The original EDIFACT segment layout is listed. The appropriate comments relevant to the EANCOM® subset are indicated.

Notes:

1. The segments are presented in the sequence in which they appear in the message. The segment or segment group tag is followed by the (M)andatory / (C)onditional indicator, the maximum number of occurrences and the segment description.

2. Reading from left to right, in column one, the data element tags and descriptions are shown, followed by in the second column the EDIFACT status (M or C), the field format, and the picture of the data elements. These first pieces of information constitute the original EDIFACT segment layout.

   Following the EDIFACT information, EANCOM® specific information is provided in the third, fourth, and fifth columns. In the third column a status indicator for the use of (C)onditional EDIFACT data elements (see 2.1 through 2.3 below), in the fourth column the restricted indicator (see point 3 on the following page), and in the fifth column notes and code values used for specific data elements in the message.

2.1 (M)andatory data elements in EDIFACT segments retain their status in EANCOM®.

2.2 Additionally, there are five types of status for data elements with a (C)onditional EDIFACT status, whether for simple, component or composite data elements. These are listed below and can be identified when relevant by the following abbreviations:

- REQUIRED	**R**	Indicates that the entity is required and must be sent.
- ADVISED	**A**	Indicates that the entity is advised or recommended.
- DEPENDENT	**D**	Indicates that the entity must be sent in certain conditions, as defined by the relevant explanatory note.
- OPTIONAL	**O**	Indicates that the entity is optional and may be sent at the discretion of the user.
- NOT USED	**N**	Indicates that the entity is not used and should be omitted.

2.3 If a composite is flagged as **N, NOT USED**, all data elements within that composite will have blank status indicators assigned to them.

3. Status indicators detailed in the fourth column which directly relate to the code values detailed in the fifth **column** may have two values:

- RESTRICTED	*****	A data element marked with an asterisk (*) in the fourth column indicates that the listed codes in column five are the only codes available for use with this data element, in this segment, in this message.
- OPEN		All data elements where coded representation of data is possible and a restricted set of code values is not indicated are open (no asterisk in fourth column). The available codes are listed in the EANCOM® Data Elements and Code Sets Directory. Code values may be given as examples or there may be a note on the format or type of code to be used.

4. Different colours are used for the code values in the segment details: restricted codes are in red and open codes in blue.

5. Segments Layout

Segment number: 1

UNH - M 1 - Message header

Function:

To head, identify and specify a message.

Notes:
1. Data element S009/0057 is retained for upward compatibility. The use of S016 and/or S017 is encouraged in preference.
2. The combination of the values carried in data elements 0062 and S009 shall be used to identify uniquely the message within its group (if used) or if not used, within its interchange, for the purpose of acknowledgement.

		EDIFACT	GS1	*	Description
0062	Message reference number	M an..14	**M**		Senders unique message reference. Sequence number of messages in the interchange. DE 0062 in the UNT will have the same value. Generated by the sender.
S009	MESSAGE IDENTIFIER	M	**M**		
0065	Message type	M an..6	**M**	*	TAXCON = Tax control message
0052	Message version number	M an..3	**M**	*	D = Draft version/UN/EDIFACT Directory
0054	Message release number	M an..3	**M**	*	01B = Release 2001 - B
0051	Controlling agency, coded	M an..3	**M**	*	UN = UN/CEFACT
0057	Association assigned code	C an..6	**R**	*	EAN004 = GS1 version control number (GS1 Permanent Code) Indicates that the message is the EANCOM version 004 of the Tax Control message.
0110	Code list directory version number	C an..6	**O**		This data element can be used to identify the codelist agreed by the interchange partners, e.g. EAN001 = EANCOM 2002 S4 codelist released on 01.12.2002 by GS1.
0113	Message type sub-function identification	C an..6	**N**		
0068	Common access reference	C an..35	**N**		
S010	STATUS OF THE TRANSFER	C	**N**		
0070	Sequence of transfers	M n..2			
0073	First and last transfer	C a1			
S016	MESSAGE SUBSET IDENTIFICATION	C	**N**		
0115	Message subset identification	M an..14			
0116	Message subset version number	C an..3			
0118	Message subset release number	C an..3			
0051	Controlling agency, coded	C an..3			
S017	MESSAGE IMPLEMENTATION GUIDELINE IDENTIFICATION	C	**N**		
0121	Message implementation guideline identification	M an..14			
0122	Message implementation guideline version number	C an..3			

5. Segments Layout

Segment number: 1

		EDIFACT	GS1	*	Description
0124	Message implementation guideline release number	C an..3			
0051	Controlling agency, coded	C an..3			
S018	SCENARIO IDENTIFICATION	C	**N**		
0127	Scenario identification	M an..14			
0128	Scenario version number	C an..3			
0130	Scenario release number	C an..3			
0051	Controlling agency, coded	C an..3			

Segment Notes:

This segment is used to head, identify and specify a message.
DE's 0065, 0052, and 0054: Indicate that the message is a Tax Control message based on the EDIFACT D.01B directory.

Example:
UNH+ME000001+TAXCON:D:01B:UN:EAN004'

5. Segments Layout

Segment number: 2

BGM - M 1 - Beginning of message					
Function: To indicate the type and function of a message and to transmit the identifying number.					
		EDIFACT	GS1	*	Description
C002	DOCUMENT/MESSAGE NAME	C	**R**		
1001	Document name code	C an..3	**R**	*	938 = Tax declaration (general)
1131	Code list identification code	C an..17	**N**		
3055	Code list responsible agency code	C an..3	**N**		
1000	Document name	C an..35	**O**		
C106	DOCUMENT/MESSAGE IDENTIFICATION	C	**R**		
1004	Document identifier	C an..35	**R**		Tax Control number assigned by the document sender. For global unique identification of documents Global Document Type Identifier (GDTI) is available.
1056	Version identifier	C an..9	**N**		
1060	Revision identifier	C an..6	**N**		
1225	Message function code	C an..3	**R**	*	9 = Original 31 = Copy
4343	Response type code	C an..3	**N**		
Segment Notes: This segment is used to indicate the type and function of a message and to transmit the identifying number. The document number is detailed in DE 1004 other references are detailed in the RFF segment (segment group 1). Example: BGM+938+536+9'					

5. Segments Layout

Segment number: 3

DTM - M 5 - Date/time/period					
Function: To specify date, and/or time, or period.					
		EDIFACT	GS1	*	Description
C507	DATE/TIME/PERIOD	M	**M**		
2005	Date or time or period function code qualifier	M an..3	**M**	*	137 = Document/message date/time 155 = Accounting period start date 156 = Accounting period end date 165 = Tax period start date 166 = Tax period end date 263 = Invoicing period 322 = Accounting period 325 = Tax period For the identification of a tax control to a period one, or a combination of, the following code values must be used, 155, 156, 165, 166, 263, 322 or 325.
2380	Date or time or period value	C an..35	**R**		
2379	Date or time or period format code	C an..3	**R**		102 = CCYYMMDD 203 = CCYYMMDDHHMM 718 = CCYYMMDD-CCYYMMDD

Segment Notes:

This segment is used to specify the date or period of the Tax Control message.
DE 2005: Identification of the 'Document/message date/time' (code value 137) is mandatory in an EANCOM message.

Example:
DTM+137:20020110:102'
The Tax Control was generated on the 10th of January 2002.

DTM+263:20020101200101 31:718'
The Tax Control message relates to the invoicing period from the 1st to the 31st of January 2002.

5. Segments Layout

Segment number: 4

SG1	- C	5 -	RFF-DTM
RFF	- M	1 -	Reference

Function:

To specify a reference.

		EDIFACT	GS1	*	Description
C506	REFERENCE	M	**M**		
1153	Reference code qualifier	M an..3	**M**		ALT = Previous tax control number
1154	Reference identifier	C an..70	**R**		
1156	Document line identifier	C an..6	**N**		
4000	Reference version identifier	C an..35	**N**		
1060	Revision identifier	C an..6	**N**		

Segment Notes:

This segment is used to specify references which apply to the whole message, e.g. the last TAXCON message exchanged.

Example:
RFF+ALT:535'

5. Segments Layout

Segment number: 5

SG1	- C	5 -	RFF-DTM
DTM	- C	5 -	Date/time/period

Function:

To specify date, and/or time, or period.

		EDIFACT	GS1	*	Description
C507	DATE/TIME/PERIOD	M	**M**		
2005	Date or time or period function code qualifier	M an..3	**M**	*	171 = Reference date/time Code value 171 relates to the issue date of the reference.
2380	Date or time or period value	C an..35	**R**		
2379	Date or time or period format code	C an..3	**R**		102 = CCYYMMDD 718 = CCYYMMDD-CCYYMMDD

Segment Notes:

This segment is used to specify dates relating to the references given in the previous RFF segment.

Example:
DTM+171:20021228:102'

5. Segments Layout

Segment number: 6

SG2	- M	5 -	NAD-RFF
NAD	- M	1 -	Name and address

Function:

To specify the name/address and their related function, either by C082 only and/or unstructured by C058 or structured by C080 thru 3207.

		EDIFACT	GS1	*	Description
3035	Party function code qualifier	M an..3	**M**		AB = Buyer's agent/representative BY = Buyer SR = Supplier's agent/representative SU = Supplier TC = Tax collector's office The values AB, SR, and TC should only be used when the tax control is being used for period summary purposes and the message is to be issued to a third party..
C082	PARTY IDENTIFICATION DETAILS	C	**A**		
3039	Party identifier	M an..35	**M**		For the identification of parties it is recommended to use GLN - Format n13.
1131	Code list identification code	C an..17	**N**		
3055	Code list responsible agency code	C an..3	**R**	*	9 = GS1
C058	NAME AND ADDRESS	C	**O**		This composite may only be used to fulfill the requirements of directive 2003/58/EC, article 4.
3124	Name and address description	M an..35	**M**		
3124	Name and address description	C an..35	**O**		
3124	Name and address description	C an..35	**O**		
3124	Name and address description	C an..35	**O**		
3124	Name and address description	C an..35	**O**		
C080	PARTY NAME	C	**D**		
3036	Party name	M an..35	**M**		
3036	Party name	C an..35	**O**		
3036	Party name	C an..35	**O**		
3036	Party name	C an..35	**O**		
3036	Party name	C an..35	**O**		
3045	Party name format code	C an..3	**O**		
C059	STREET	C	**D**		
3042	Street and number or post office box identifier	M an..35	**M**		
3042	Street and number or post office box identifier	C an..35	**O**		
3042	Street and number or post office box identifier	C an..35	**O**		
3042	Street and number or post office box identifier	C an..35	**O**		
3164	City name	C an..35	**D**		

5. Segments Layout

Segment number: 6

		EDIFACT	GS1	*	Description
C819	COUNTRY SUB-ENTITY DETAILS	C	**D**		
3229	Country sub-entity name code	C an..9	**O**		
1131	Code list identification code	C an..17	**O**		
3055	Code list responsible agency code	C an..3	**O**		
3228	Country sub-entity name	C an..70	**O**		
3251	Postal identification code	C an..17	**D**		
3207	Country name code	C an..3	**D**		ISO 3166 two alpha code

Segment Notes:

This segment is used to identify the trading partners exchanging the tax control message. The identification of the buyer and supplier is mandatory in all tax control messages. When the tax control message is used to summarise a period for a third party, e.g. auditor, tax authorities, the party for whom the information is required must also be specified.

Example:
NAD+SU+5412345000013::9'
NAD+BY+4012345500004::9'

Dependency Notes:
The following composites and data elements are only used when a coded name and address can not be used.
The affected composites and data elements are as follows:
C080 - C059 - 3164 - C819 - 3251 - 3207

5. Segments Layout

Segment number: 7

SG2	- M	5 - NAD-RFF
RFF	- C	1 - Reference

Function:

To specify a reference.

		EDIFACT	GS1	*	Description
C506	REFERENCE	M	**M**		
1153	Reference code qualifier	M an..3	**M**	*	YC1 = Additional party identification (GS1 Temporary Code) FC = Fiscal number GN = Government reference number VA = VAT registration number XA = Company/place registration number
1154	Reference identifier	C an..70	**R**		
1156	Document line identifier	C an..6	**N**		
4000	Reference version identifier	C an..35	**N**		
1060	Revision identifier	C an..6	**N**		

Segment Notes:

This segment is used to specify references related to the parties identified in the previous NAD segment.
Vat Registered Numbers quoted here must be the same as the numbers used in the invoice, or batch of invoices, to which the tax control refers.

Example:
RFF+VA:VR123554'

5. Segments Layout

Segment number: 8

UNS - M 1 - Section control				
Function: To separate header, detail and summary sections of a message. Notes: To be used by message designers only when required to avoid ambiguities.				
	EDIFACT	GS1	*	Description
0081 Section identification	M a1	**M**	*	D = Header/detail section separation
Segment Notes: This segment is used to identify the end of the heading section of the message and the start of the detail section of the message. Example: UNS+D'				

5. Segments Layout

Segment number: 9

SG3	- M	9999	-	RFF-DTM-SG4
RFF	- M	1	-	Reference

Function:

To specify a reference.

		EDIFACT	GS1	*	Description
C506	REFERENCE	M	**M**		
1153	Reference code qualifier	M an..3	**M**	*	ALL = Message batch number
1154	Reference identifier	C an..70	**R**		This data element must be used to indicate the original message batch number(s) (specified in the RFF segment (segment group 1) of the original invoice message) for each interchange to which the tax control relates. A separate occurrence of this segment must be used for each interchange being summarised.
1156	Document line identifier	C an..6	**N**		
4000	Reference version identifier	C an..35	**N**		
1060	Revision identifier	C an..6	**N**		

Segment Notes:

This segment is used to identify the invoice file (or files) to which the tax control relates.
This segment is the trigger segment for the message detail section and must appear at least once in the message.

Example:
RFF+ALL:211'

5. Segments Layout

Segment number: 10

SG3	- M	9999	-	RFF-DTM-SG4
DTM	- C	5	-	Date/time/period

Function:

To specify date, and/or time, or period.

		EDIFACT	GS1	*	Description
C507	DATE/TIME/PERIOD	M	**M**		
2005	Date or time or period function code qualifier	M an..3	**M**	*	171 = Reference date/time
2380	Date or time or period value	C an..35	**R**		The date specified here should be the date and time of the message batch number of the interchange being summarised. In the original invoice message this information appeared in the DTM segment immediately after the RFF segment (segment group 1).
2379	Date or time or period format code	C an..3	**R**		102 = CCYYMMDD 203 = CCYYMMDDHHMM 718 = CCYYMMDD-CCYYMMDD

Segment Notes:

This segment is used to specify dates and times related to the previous RFF segment.

Example:
DTM+171:20020910:102'

5. Segments Layout

Segment number: 11

SG3	- M	9999 -	RFF-DTM-SG4
SG4	- M	9 -	DOC-MOA-CNT-SG5
DOC	- M	1 -	Document/message details

Function:

To identify documents and details directly related to it.

		EDIFACT	GS1	*	Description
C002	DOCUMENT/MESSAGE NAME	M	**M**		
1001	Document name code	C an..3	**R**	*	82 = Metered services invoice 83 = Credit note related to financial adjustments 84 = Debit note related to financial adjustments 325 = Proforma invoice 380 = Commercial invoice 381 = Credit note - goods and services 383 = Debit note - goods and services 385 = Consolidated invoice 386 = Prepayment invoice 393 = Factored invoice
1131	Code list identification code	C an..17	**N**		
3055	Code list responsible agency code	C an..3	**N**		
1000	Document name	C an..35	**N**		
C503	DOCUMENT/MESSAGE DETAILS	C	**N**		
1004	Document identifier	C an..35			
1373	Document status code	C an..3			
1366	Document source description	C an..70			
3453	Language name code	C an..3			
1056	Version identifier	C an..9			
1060	Revision identifier	C an..6			
3153	Communication medium type code	C an..3	**N**		
1220	Document copies required quantity	C n..2	**N**		
1218	Document originals required quantity	C n..2	**N**		

Segment Notes:

This segment is used to identify the type of document being referenced, invoice, credit note, etc. This enables the tax types and values within the individual documents to be summarised.

Example:
DOC+380'

5. Segments Layout

Segment number: 12

SG3	- M	9999	-	RFF-DTM-SG4
SG4	- M	9	-	DOC-MOA-CNT-SG5
MOA	- C	9	-	Monetary amount

Function:

To specify a monetary amount.

		EDIFACT	GS1	*	Description
C516	MONETARY AMOUNT	M	**M**		
5025	Monetary amount type code qualifier	M an..3	**M**	*	39 = Invoice total amount 125 = Taxable amount 128 = Total amount
5004	Monetary amount	C n..35	**R**		The value specified should always be excluding taxes. The tax and taxable amounts are specified in segment group 5 following.
6345	Currency identification code	C an..3	**O**		ISO 4217 three alpha code
6343	Currency type code qualifier	C an..3	**O**		4 = Invoicing currency
4405	Status description code	C an..3	**N**		

Segment Notes:

This segment is used to specify the total amounts due on the document type identified in the previous DOC segment.

Example:
MOA+128:65231:EUR'

5. Segments Layout

Segment number: 13

SG3	- M	9999	-	RFF-DTM-SG4
SG4	- M	9	-	DOC-MOA-CNT-SG5
CNT	- M	1	-	Control total

Function:

To provide control total.

		EDIFACT	GS1	*	Description
C270	CONTROL	M	**M**		
6069	Control total type code qualifier	M an..3	**M**	*	31 = Number of messages
6066	Control total value	M n..18	**M**		
6411	Measurement unit code	C an..3	**O**		

Segment Notes:

This segment is used to specify the total number of messages/documents being summarised for the document type identified in the DOC segment.

Example:
CNT+31:52'

5. Segments Layout

Segment number: 14

SG3	- M	9999	-	RFF-DTM-SG4
SG4	- M	9	-	DOC-MOA-CNT-SG5
SG5	- M	9	-	TAX-MOA
TAX	- M	1	-	Duty/tax/fee details

Function:

To specify relevant duty/tax/fee information.

		EDIFACT	GS1	*	Description
5283	Duty or tax or fee function code qualifier	M an..3	**M**	*	7 = Tax
C241	DUTY/TAX/FEE TYPE	C	**D**		
5153	Duty or tax or fee type name code	C an..3	**O**		GST = Goods and services tax VAT = Value added tax
1131	Code list identification code	C an..17	**O**		
3055	Code list responsible agency code	C an..3	**D**		
5152	Duty or tax or fee type name	C an..35	**O**		
C533	DUTY/TAX/FEE ACCOUNT DETAIL	C	**O**		
5289	Duty or tax or fee account code	M an..6	**M**		
1131	Code list identification code	C an..17	**O**		
3055	Code list responsible agency code	C an..3	**D**		
5286	Duty or tax or fee assessment basis value	C an..15	**O**		
C243	DUTY/TAX/FEE DETAIL	C	**A**		
5279	Duty or tax or fee rate code	C an..7	**O**		
1131	Code list identification code	C an..17	**O**		
3055	Code list responsible agency code	C an..3	**D**		
5278	Duty or tax or fee rate	C an..17	**R**		
5273	Duty or tax or fee rate basis code	C an..12	**O**		
1131	Code list identification code	C an..17	**O**		
3055	Code list responsible agency code	C an..3	**D**		
5305	Duty or tax or fee category code	C an..3	**D**		A = Mixed tax rate E = Exempt from tax S = Standard rate
3446	Party tax identifier	C an..20	**O**		
1227	Calculation sequence code	C an..3	**N**		

Segment Notes:

This segment is used to identify the different tax rates included for the document type identified in the DOC segment.

Example:

5. Segments Layout

Segment number: 14

TAX+7+VAT+++:::12.5+S'

Dependency notes:
DE C241 and 5305: Tax types and categories will vary from country to country. They should be defined by national guidelines.

5. Segments Layout

Segment number: 15

SG3	- M	9999	-	RFF-DTM-SG4
SG4	- M	9	-	DOC-MOA-CNT-SG5
SG5	- M	9	-	TAX-MOA
MOA	- M	3	-	Monetary amount

Function:

To specify a monetary amount.

		EDIFACT	GS1	*	Description
C516	MONETARY AMOUNT	M	**M**		
5025	Monetary amount type code qualifier	M an..3	**M**	*	124 = Tax amount 125 = Taxable amount
5004	Monetary amount	C n..35	**R**		
6345	Currency identification code	C an..3	**O**		ISO 4217 three alpha code
6343	Currency type code qualifier	C an..3	**O**		4 = Invoicing currency
4405	Status description code	C an..3	**N**		

Segment Notes:

This segment is used to specify the tax amounts for the tax rate specified in the previous TAX segment.

Example:
MOA+124:2531.11:EUR'

5. Segments Layout

Segment number: 16

UNT - M 1 - Message trailer					
Function: To end and check the completeness of a message. Notes: 1. 0062, the value shall be identical to the value in 0062 in the corresponding UNH segment.					
		EDIFACT	GS1	*	Description
0074	Number of segments in a message	M n..10	**M**		The total number of segments in the message is specified here.
0062	Message reference number	M an..14	**M**		The message reference numbered detailed here should equal the one specified in the UNH segment.
Segment Notes: This segment is a mandatory UN/EDIFACT segment. It must always be the last segment in the message. Example: UNT+18+ME000001'					

6. Examples

The following is an example of a simple Tax Control message between a seller identified by GLN 5412345000013 (VAT ref: 19853344) and a buyer identified by GLN 4012345500004 (VAT ref: VR123555).

The message has reference number 536 and it was generated on the 10th of January 2002.

The message relates to message batch number 237 dated on the 10th of January 2002. The tax control summarises 15 commercial invoices with a total value of the invoices of 65231 Euros.

The rate of taxes applicable to the total amount are as follows:

10%	to	22600
12.5%	to	28350
21%	to	14281

UNH+ME000001+TAXCON:D:01B:EN:EAN004'	Message header
BGM+938+536+9'	Tax control number 536
DTM+137:20020110:102'	Message date is 10th of January 2002
NAD+SU+5412345000013::9'	Supplier is identified by GLN 5412345000013
RFF+VA:1985334'	Supplier's VAT number is 19853344
NAD+BY+4012345500004::9'	Buyer is identified by GLN 4012345500004
RFF+VA:VR123555'	Buyer's VAT number is VR123555
UNS+D'	Message header/detail separation
RFF+ALL:237'	Tax control relates to message batch number 237
DTM+171:20020110:102'	Date of batch is 10th of January 2002
DOC+380'	Batch relates to commercial invoices
MOA+39:65231:EUR'	Invoice value of batch is 65231 EUR
CNT+31:15'	Total value relates to 15 invoices
TAX+7+VAT+++:::10+S'	First rate of VAT is 10%
MOA+125:22600:EUR'	22600 EUR is subject to 10% VAT
TAX+7+VAT+++:::12.5+S'	Second rate of VAT is 12.5%
MOA+125:28350:EUR'	28350 EUR is subject to 12.5% VAT
TAX+7+VAT+++:::21+S'	Third rate of VAT is 21%
MOA+125:14281:EUR'	14281 EUR is subject to 21% VAT
UNT+20+ME000001'	Total number of segments in the message equals 20

Note:
The EDI interchange will include the UNB..UNZ segments and, if applicable, the UNG..UNE segments. (See part 1

6. Examples

section 5.7).